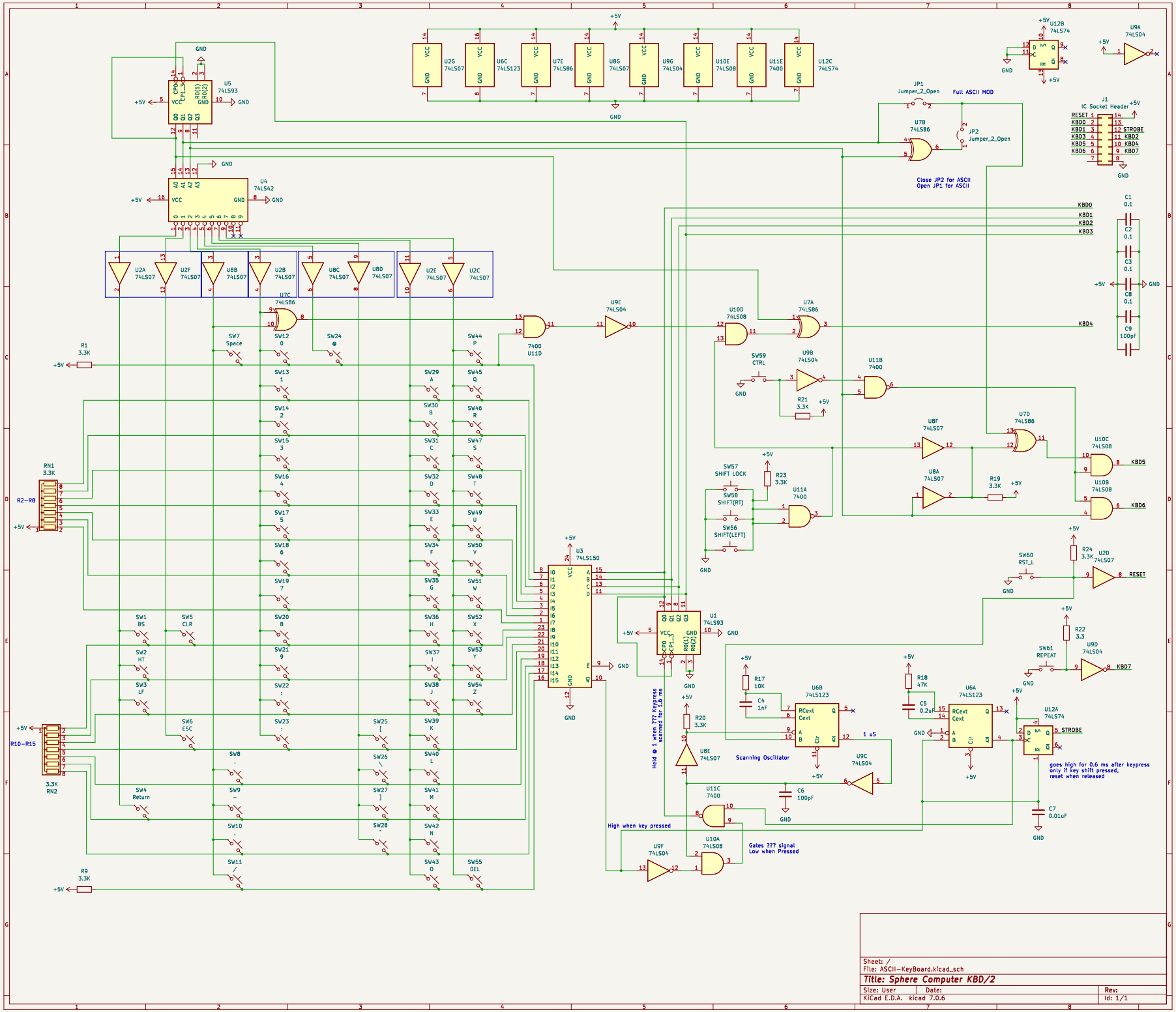
U2G 74LS07
U6C 74LS123
U7E 74LS86
U8G 74LS07
U9G 74LS04
U10E 74LS08
U11E 7400
U12C 74LS74
U12B 74LS74
U9A 74LS04
JP1 Jumper_2_Open
Full ASCII MOD
JP2 Jumper_2_Open
U7B 74LS86
Close JP2 for ASCII
Open JP1 for ASCII
J1 IC Socket Header
RESET
KBD0
KBD1
KBD3
KBD5
KBD6
STROBE
KBD2
KBD4
KBD7
C1 0.1
C2 0.1
C3 0.1
C8 0.1
C9 100pF
U5 74LS93
U4 74LS42
U2A 74LS07
U2F 74LS07
U8B 74LS07
U2B 74LS07
U8C 74LS07
U8D 74LS07
U2E 74LS07
U2C 74LS07
U7C 74LS86
7400 U11D
U9E 74LS04
U10D 74LS08
U7A 74LS86
SW59 CTRL
U9B 74LS04
R21 3.3K
U11B 7400
U8F 74LS07
U7D 74LS86
U10C 74LS08
U8A 74LS07
R19 3.3K
U10B 74LS08
SW57 SHIFT LOCK
R23 3.3K
SW58 SHIFT(RT)
SW56 SHIFT(LEFT)
U11A 7400
SW60 RST_L
R24 3.3K
U2D 74LS07
SW61 REPEAT
R22 3.3
U9D 74LS04
R1 3.3K
R9 3.3K
RN1 3.3K
R2-R8
RN2 3.3K
R10-R15
SW7 Space
SW24 @
SW44 P
SW12 0
SW13 1
SW14 2
SW15 3
SW16 4
SW17 5
SW18 6
SW19 7
SW20 8
SW21 9
SW22 :
SW23 ;
SW29 A
SW30 B
SW31 C
SW32 D
SW33 E
SW34 F
SW35 G
SW36 H
SW37 I
SW38 J
SW39 K
SW40 L
SW41 M
SW42 N
SW43 O
SW45 Q
SW46 R
SW47 S
SW48 T
SW49 U
SW50 V
SW51 W
SW52 X
SW53 Y
SW54 Z
SW55 DEL
SW1 BS
SW5 CLR
SW2 HT
SW3 LF
SW6 ESC
SW4 Return
SW8 .
SW9 -
SW10 ,
SW11 /
SW25 [
SW26 \
SW27]
SW28 '
U3 74LS150
U1 74LS93
Held @ 1 when ??? Keypress scanned for 1.6 ms
R17 10K
C4 1nF
U6B 74LS123
R18 47K
C5 0.2uF
U6A 74LS123
U12A 74LS74
R20 3.3K
U8E 74LS07
Scanning Oscillator
1 uS
U9C 74LS04
C6 100pF
C7 0.01uF
goes high for 0.6 ms after keypress only if key shift pressed, reset when released
U11C 7400
High when key pressed
U9F 74LS04
U10A 74LS08
Gates ??? signal Low when Pressed
Sheet: /
File: ASCII-KeyBoard.kicad_sch
Title: Sphere Computer KBD/2
Size: User
Date:
Rev:
KiCad E.D.A. kicad 7.0.6
Id: 1/1